Technical sheet

W600/1 Hanging Flower Tower

Specification

front view

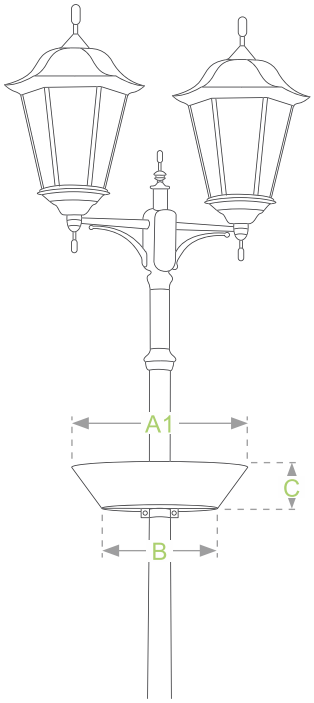

sketch

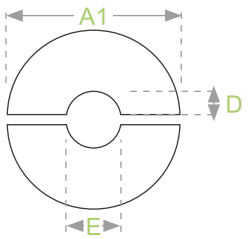

BEWARE OF IMITATIONS!

It is impossible to copy quality and safety. Only branded products with the sign of Terra can provide the highest quality, safety and accuracy of workmanship.

Made in Europe

24 month warranty

A1	Upper diameter	650 mm
B	Bottom diameter	400 mm
C	Total height	220 mm
D	Inner radius	60 mm
E	Inner diameter	120 mm
	Number of rings	1
	Capacity of substrate	2 x 19 l
	Second bottom capacity	2 x 4 l
	Weight before planting	2 x 6 kg
	Weight of the planting	2 x 12-21 kg (7)
	Estimated amount of seedlings	2 x 5-7 items

(7) Weight depends on the type of soil and its moisture

OPTIONAL - CULTIVATION INSERT
CULTURE TUB

Ask your sales advisor about the details

Production method

- laser-cut rings
- MAG/TIG welded rings
- hot dip galvanized

Optional

- powder coated rings (DUPLEX system)

Colours



1 - green 2 - gold 3 - copper 4 - black

DUPLEX System

The combination of a galvanized layer and a polyester powder coat gives an extraordinary resistance. The top coat of paint, which supposed to be a decoration, becomes an additional anticorrosive layer.

Safety

- rubber seals on each ring
- no sharp edges
- high weight and stability
- high resistance to vandalism
- fixing to the ground (optional)

Assembly system

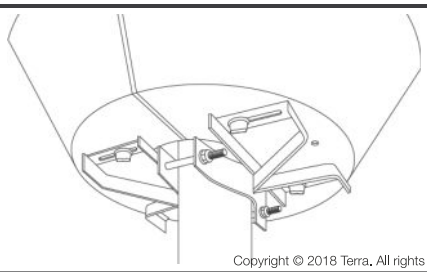

Copyright © 2018 Terra. All rights reserved.

Terra® Group
ul. Gen. Józefa Sowińskiego 42a
65-419 Zielona Góra
T: +48 68 455 62 69
F.: +48 68 414 54 25
E: info@terra-uk.eu
www.terragroup-eu.com

Technical sheet

W600/1 Hanging Flower Tower

Transport

side view

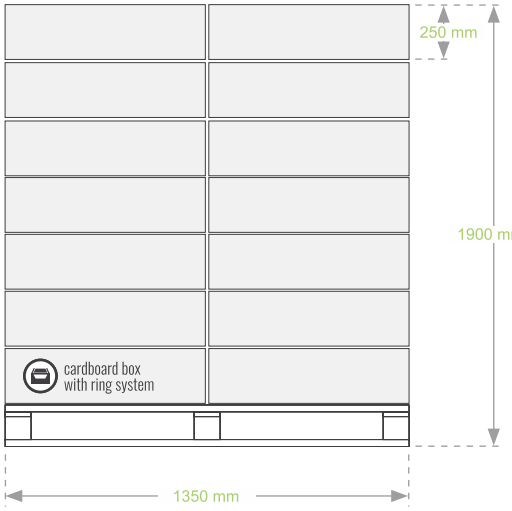

front view

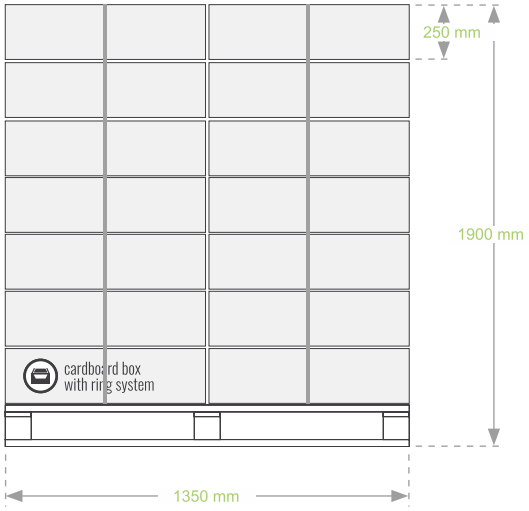

SET PACKED IN A CARDBOARD BOX

28 UP TO 28 SETS ON A PALLET

Set contents

bottom fixing A (below 59 mm) / B (60 - 89 mm)	
A rubber gasket	2 m
Fixing	1 kpl.
Screw 10 x 50	4 pcs
Wing screw 8 x 20	4 pcs

bottom fixing C (90 - 120 mm)	
A rubber gasket	2 m
Fixing	1 kpl.
Screw 10 x 70	4 pcs
Wing screw 8 x 20	4 pcs

bottom fixing D (above 120 mm)	
A rubber gasket	2 m
Fixing	1 kpl.
Screw 10 x 90	4 pcs
Wing screw 8 x 20	4 pcs

Additional Accessories

1. **double bottom system** with capacity 2 x 4 liters
2. **anti-theft screw**
3. **Culture Tub** cultivation insert

   It is a special plant container, which makes it possible to change plantings without disassembling the decoration – fast and without any complicated works.

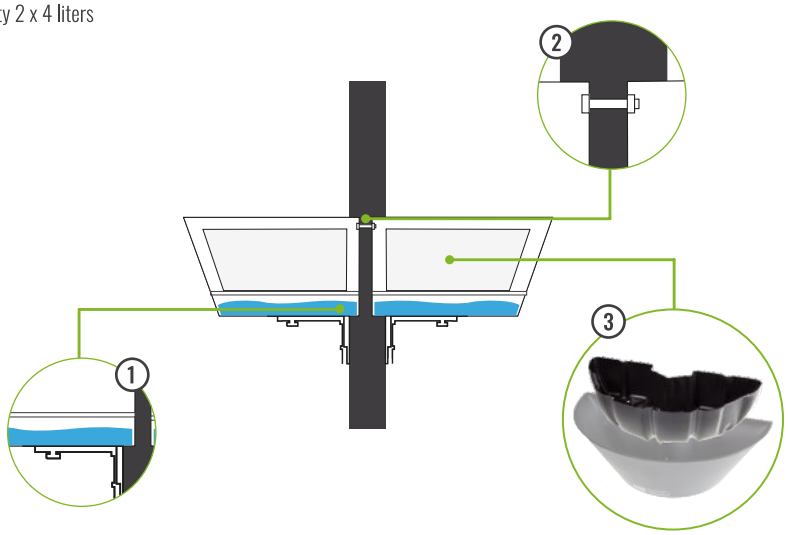

Copyright © 2018 Terra. All rights reserved.

Terra® Group
ul. Gen. Józefa Sowińskiego 42a
65-419 Zielona Góra
T: +48 68 455 62 69
F.: +48 68 414 54 25
E: info@terra-uk.eu
www.terragroup-eu.com

WARRANTY CARD

W600/1
STANDING FLOWERBED

Manufacturer	Terra Group
Brand	Cascading Flower Tower
Material	Hot-dip galvanised steel
Warranty period	24 months from the date of purchase

IDENTIFICATION DATA

- Terra Group, ul. Generała Józefa Sowińskiego 42A, 65-419 Zielona Góra
- NIP: 9280004801, REGON: 970760439
- tel. 68 455 62 69, info@terra-pl.eu

TECHNOLOGY MANUFACTURING PROCESS

- Steel ring construction
- Laser-cut rings
- MAG/TIG welding
- Hot-dip galvanising in accordance with the standard (e.g. PN-EN ISO 1461)
- Powder coating – DUPLEX system (zinc + powder coating)

WARRANTY PERIOD

- 10 years for zinc coating
- 2 years for paint coating durability
- 2 years for structure and welds

SCOPE OF WARRANTY

- Perforation corrosion of steel
- Material defects
- Manufacturing defects (cutting, MAG/TIG welds)
- Powder coating delamination
- Weld cracking

EXCLUSIONS OF LIABILITY

The warranty does not cover, for example:
- Mechanical damage (impact, vandalism)
- Scratches on the coating
- DIY repairs or modifications
- Installation not carried out in accordance with the instructions
- Damage resulting from improper use
- Natural ageing of the coating (dulling, loss of gloss)

TERMS AND CONDITIONS FOR MAINTAINING THE WARRANTY

- Regular cleaning (e.g. 1–2 times a year)
- Removal of accumulated soil/fertilisers
- Avoid damaging the coating
- Protect coating joints

COMPLAINTS PROCEDURE

- Method of notification (e-mail info@terra-pl.eu / form)
- Processing time (e.g. 14 days)
- Required documents (proof of purchase, photographs)
- Information on whether the product is subject to repair or replacement

FORM OF WARRANTY IMPLEMENTATION

- Repair the product
- Replace the component
- Replace the entire product
- Refund the equivalent value (if repair is not possible)

Date of purchase: ..... Seller's signature: .....

Copyright © 2018 Terra. All rights reserved.

Terra® Group

ul. Gen. Józefa Sowińskiego 42a
65-419 Zielona Góra

T: +48 68 455 62 69
F.: +48 68 414 54 25

E: info@terra-uk.eu
www.terragroup-eu.com