HAGS®

Ekeby Wall Bench, Thermo

MASW117689

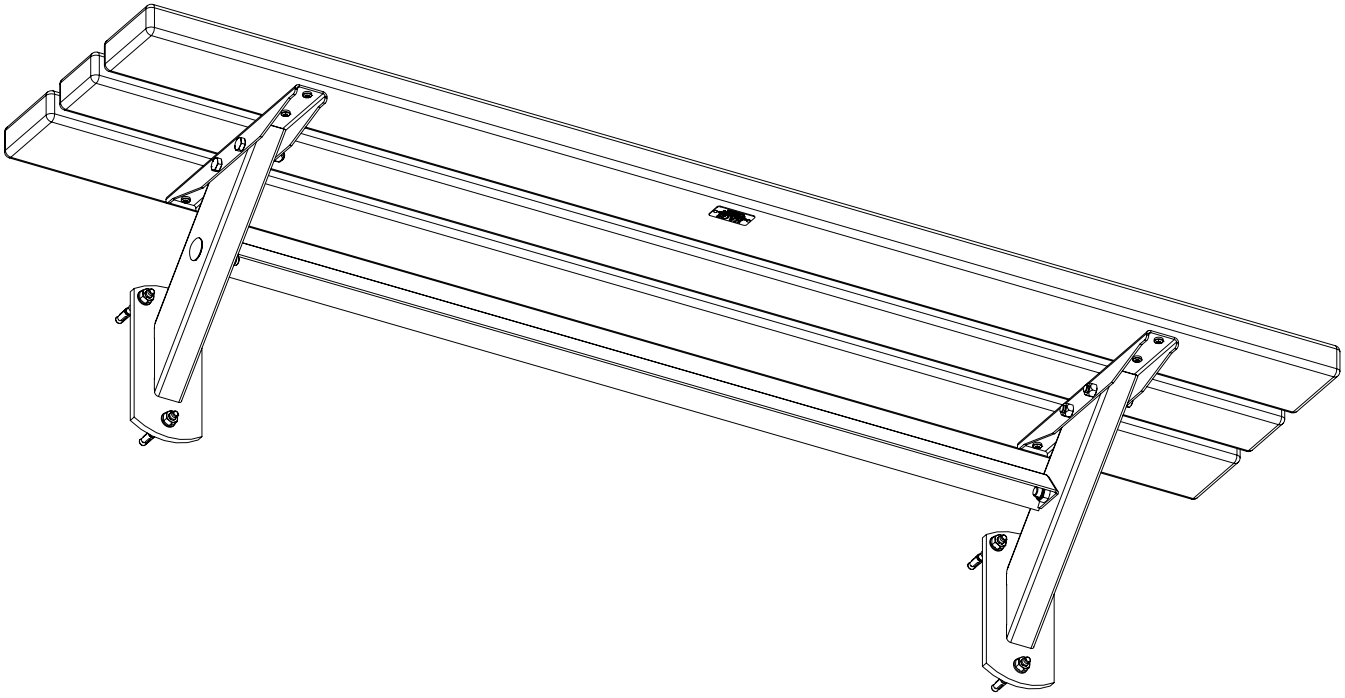

OM

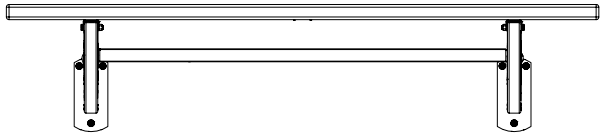

© Playpower inc
hags@hags.com
www.hags.com

1	SW117472		1**x**	1760 x 375 x 76	10.36**kg**
2	SW95355		2**x**	393 x 370 x 70	2.62**kg**
3	SW26669		1**x**	1216 x 56	4.32**kg**
4	8008383		4**x**	ISO4014-M10x60-8.8	0.05**kg**
5	8042810		4**x**	ISO7042-M10-8	0.01**kg**
6	8037113		2**x**	ISO8677-M12x60-8.8	0.08**kg**
7	8008797		2**x**	M12-8-RingA2	0.02**kg**
8	8008561		6**x**	M10x86 HDG	0.04**kg**

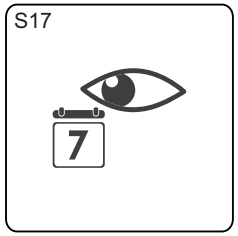





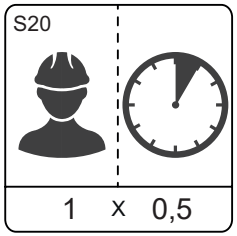

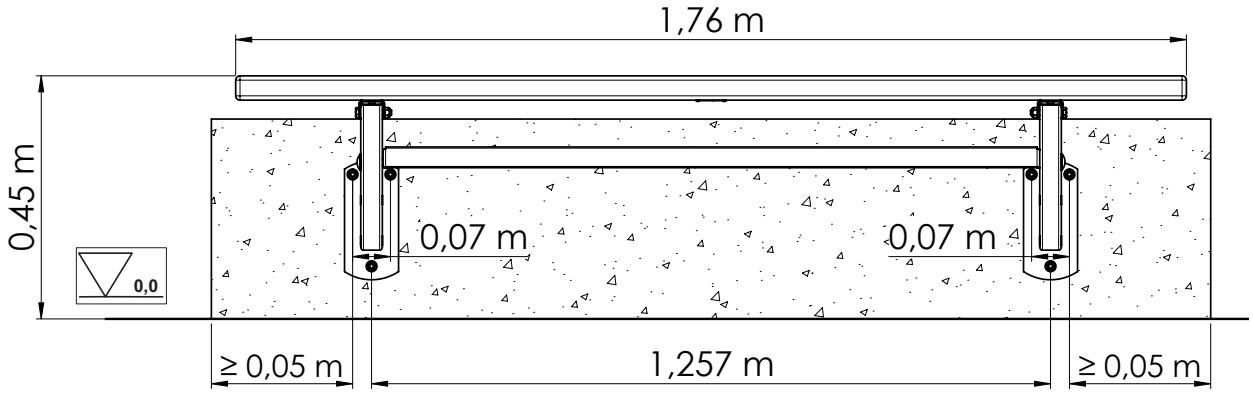

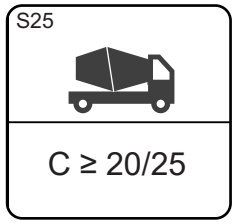

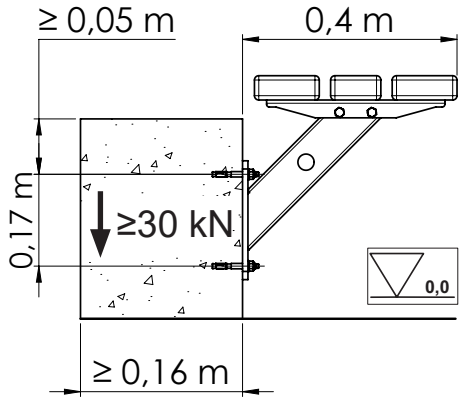

© Playpower inc
hags@hags.com
www.hags.com

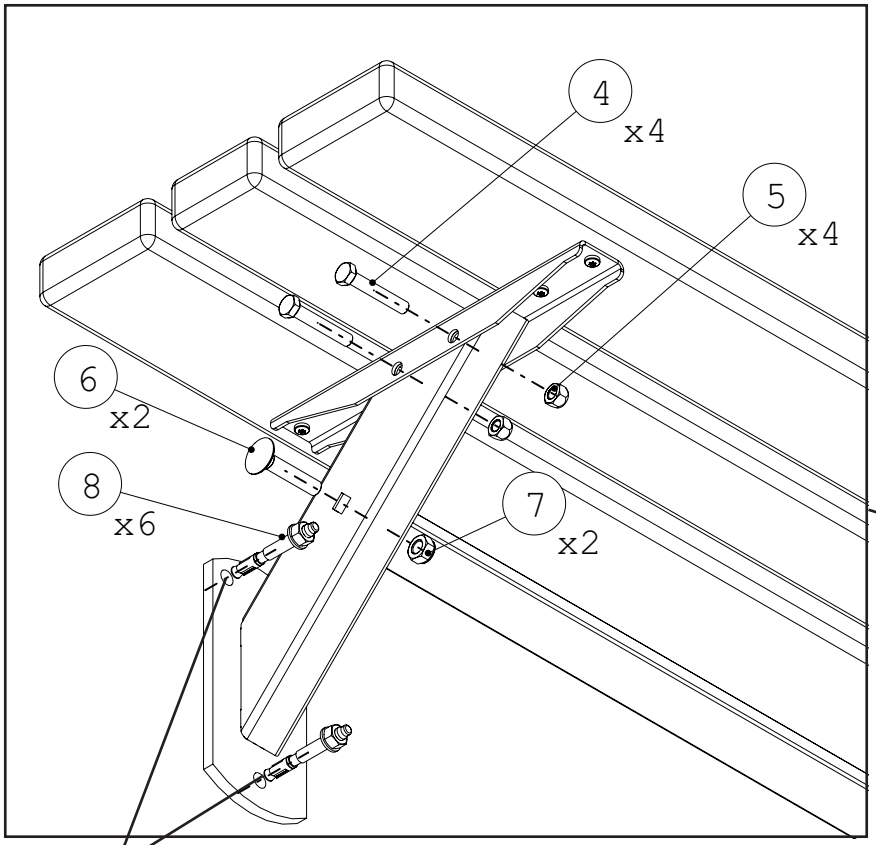

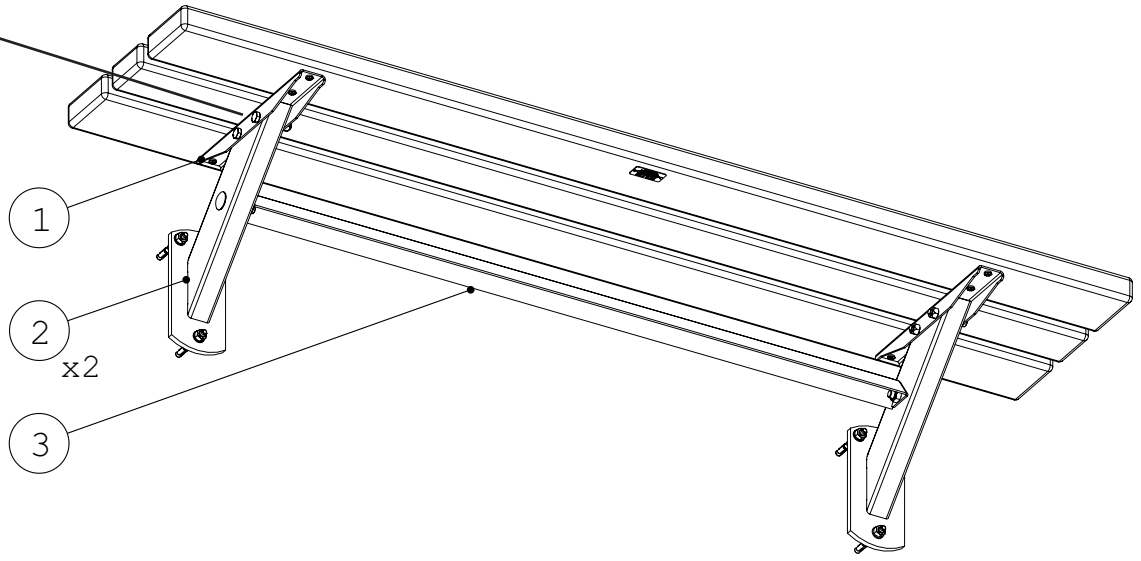

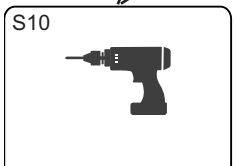

Ø10 x 70



30 Nm