

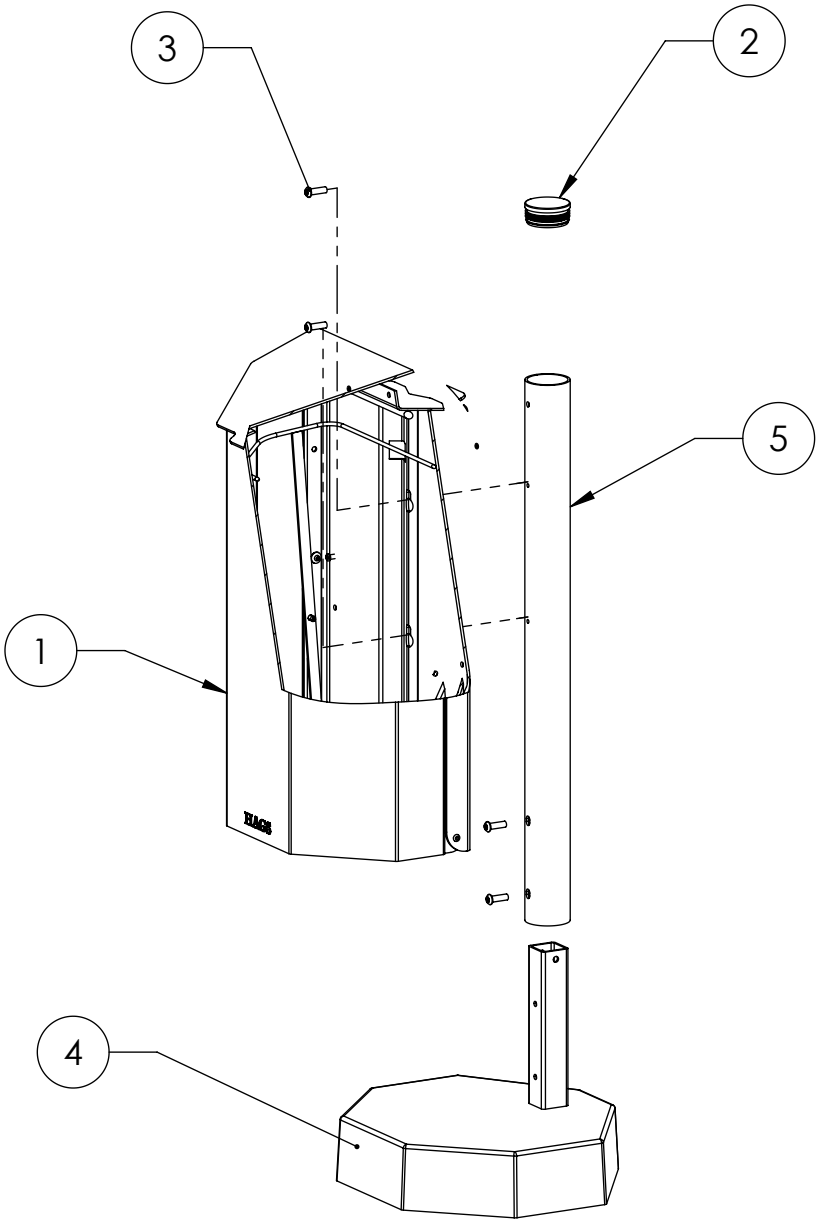

NR.	Description MA	Item Number	Qty
1	630 x 400 x 280		1
2	Ø60x27 mm	8005531	1
3	KTS-GF M8x25 mm	8008506	4
4	354 x 394 x 303 mm	8056793	1
5	Ø 60 x 3	8057953	1

HAGS
ANEBY, SWEDEN
+46(0)380–47300
www.hags.com

Rosen Free Standing

MASW47442

1 (2)

OG	MK	2026-08-10	4

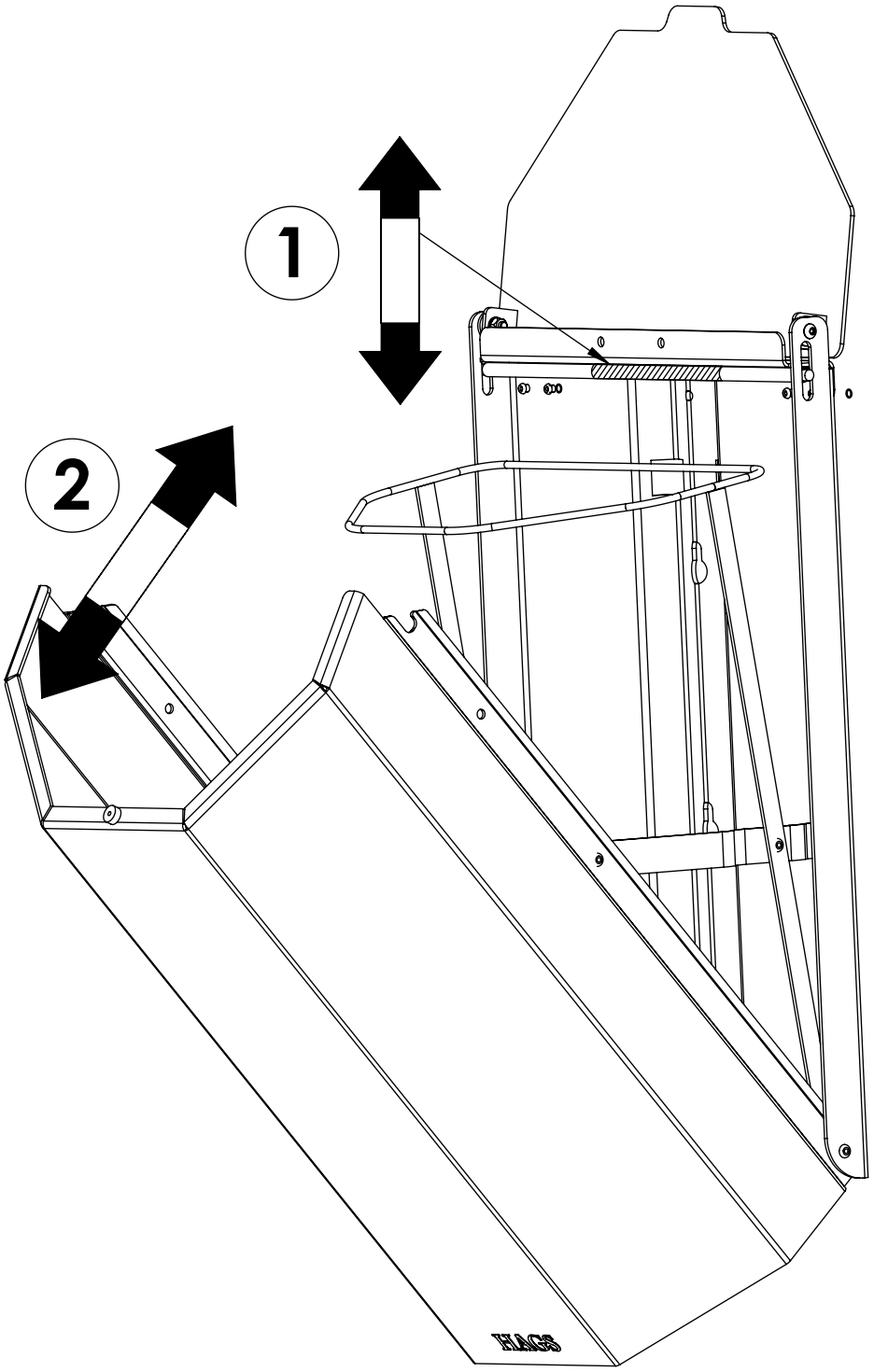

HAGS
ANEBY, SWEDEN
+46(0)380–47300
www.hags.com

Rosen Free Standing

MASW47442

2 (2)

OG	MK	2026-08-10	4	