# HAGS®

## Picnic Table Ljung 2,2 m

**MASW134985**

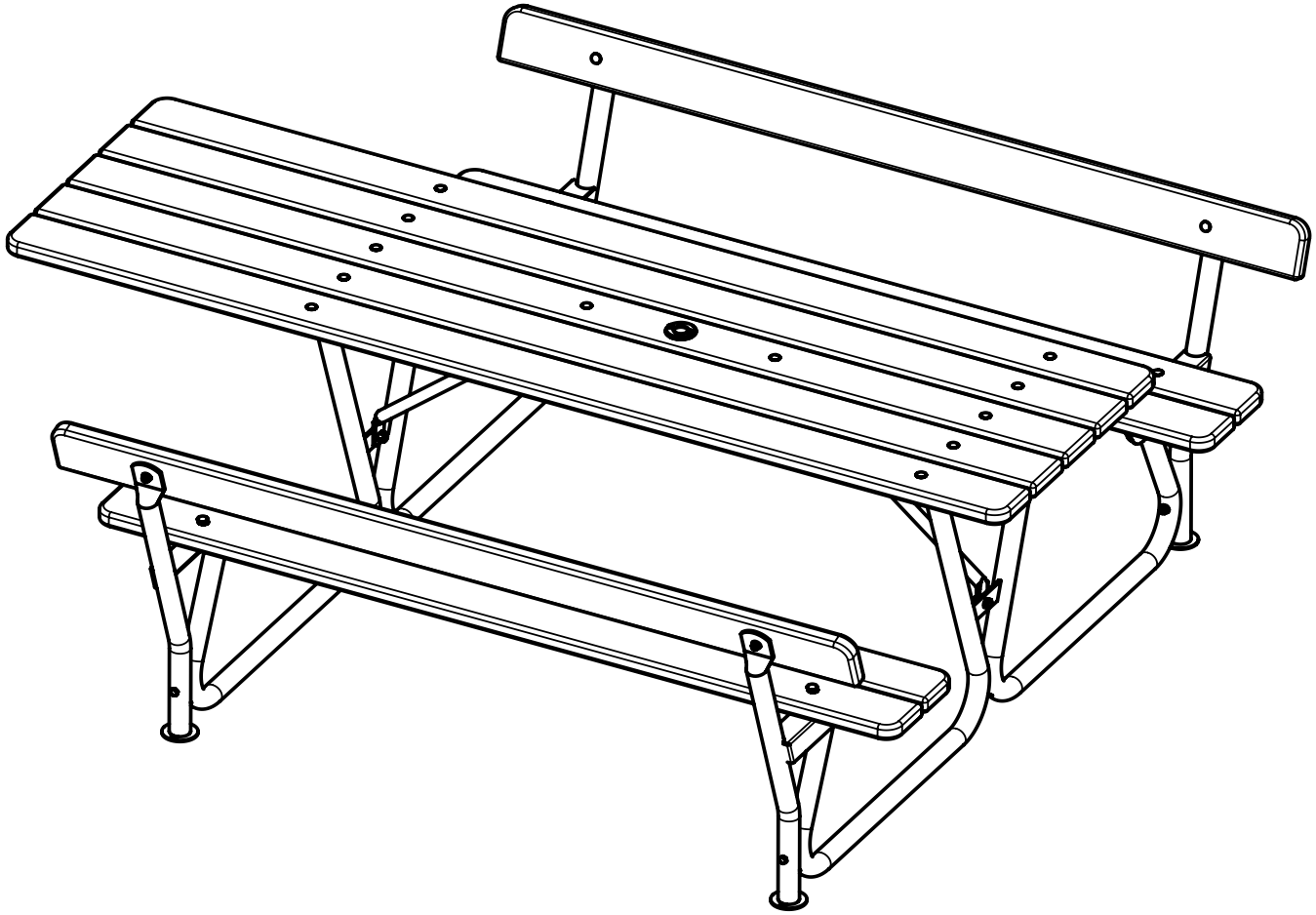

**FS**

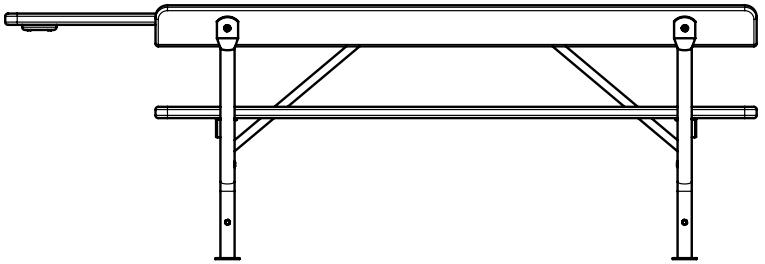

| | | | | | |
|---|---|---|---|---|---|
| 1 | SW37567 | 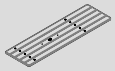 | 1 x | 2200 x 638 x 88 mm | 18.01 kg |
| 2 | 43-03943 |  | 6 x | 1760 x 118 x 32 mm | 2.74 kg |
| 3 | 31-00354 |  | 2 x | 1547 x 50 x 673 mm | 8.49 kg |
| 4 | 33-06501 |  | 2 x | Ø25 x 660 mm | 0.75 kg |
| 5 | 8008409 |  | 6 x | ISO4017-M12x25-8.8 | 0.038 kg |
| 6 | 8042811 |  | 6 x | ISO7042-M12-8 | 0.018 kg |
| 7 | 8039282 |  | 14 x | ISO8677-M8x50-8.8 | 0.027 kg |
| 8 | 8008795 |  | 14 x | M8-8-RingA2 | 0.006 kg |

| | | | | | |
|---|---|---|---|---|---|
| 9 | SW118941 |  | 2 x | 710 x 421 x 70 mm | 2.51 kg |
| 10 | SW118943 |  | 2 x | 710 x 421 x 70 mm | 2.51 kg |
| 11 | 8008361 |  | 4 x | ISO4014-M8x90-8.8 | 0.042 kg |
| 12 | 8008849 | 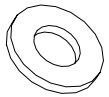 | 8 x | 9x18x2-ISO4759-3-C | 0.005 kg |
| 13 | 8008753 |  | 4 x | DIN986-M8-8 | 0.010 kg |
| 14 | 43-02628 |  | 4 x | Ø15x16 | 0.010 kg |
| 15 | 8039283 |  | 4 x | ISO8677-M8x55-8.8 | 0.010 kg |
| 16 | 8108316 |  | 4 x | ISO8677-M8x65-8.8 | 0.010 kg |

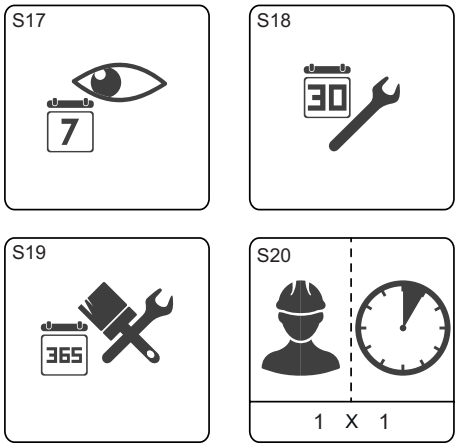


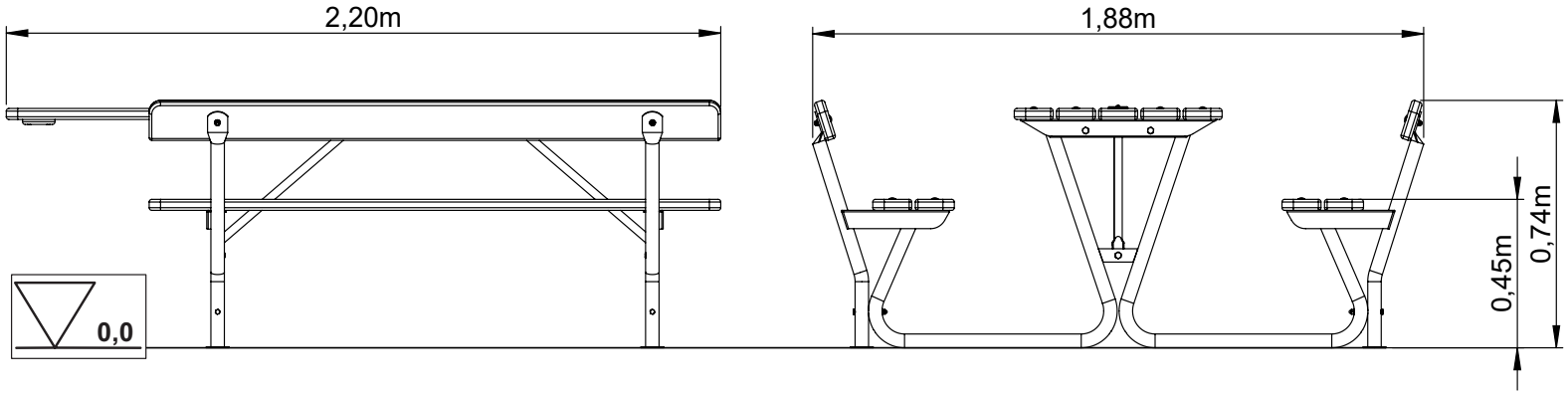



© Playpower inc
hags@hags.com
www.hags.com

**Picnic Table Ljung 2,2 m**
MASW134985

Rev: 0
22/01/26

1

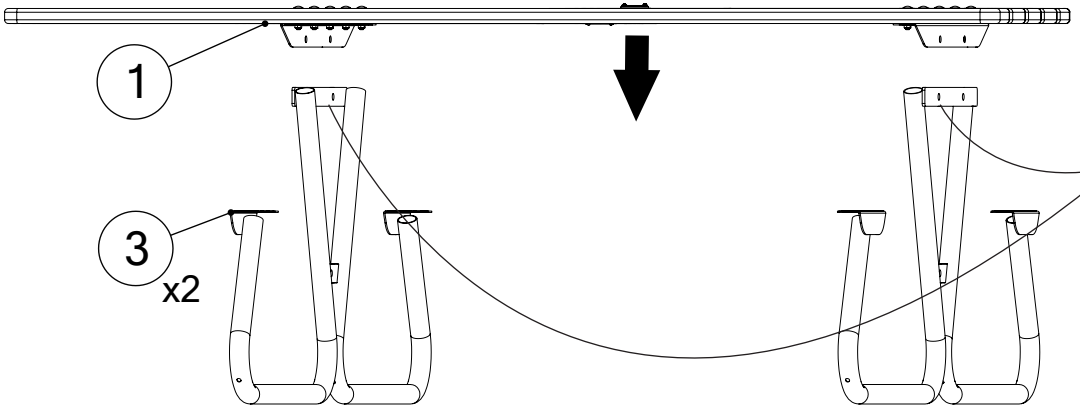


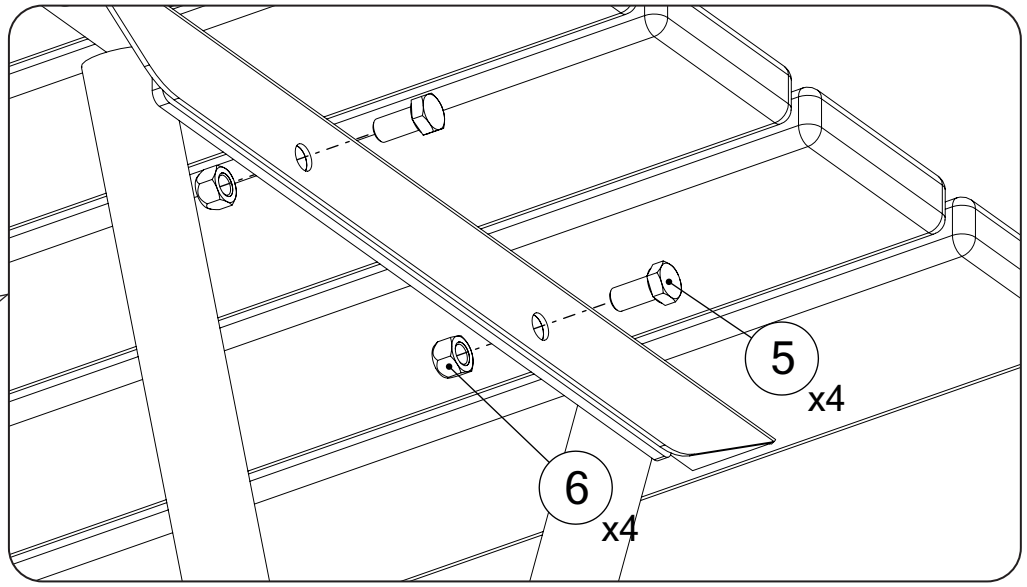


2

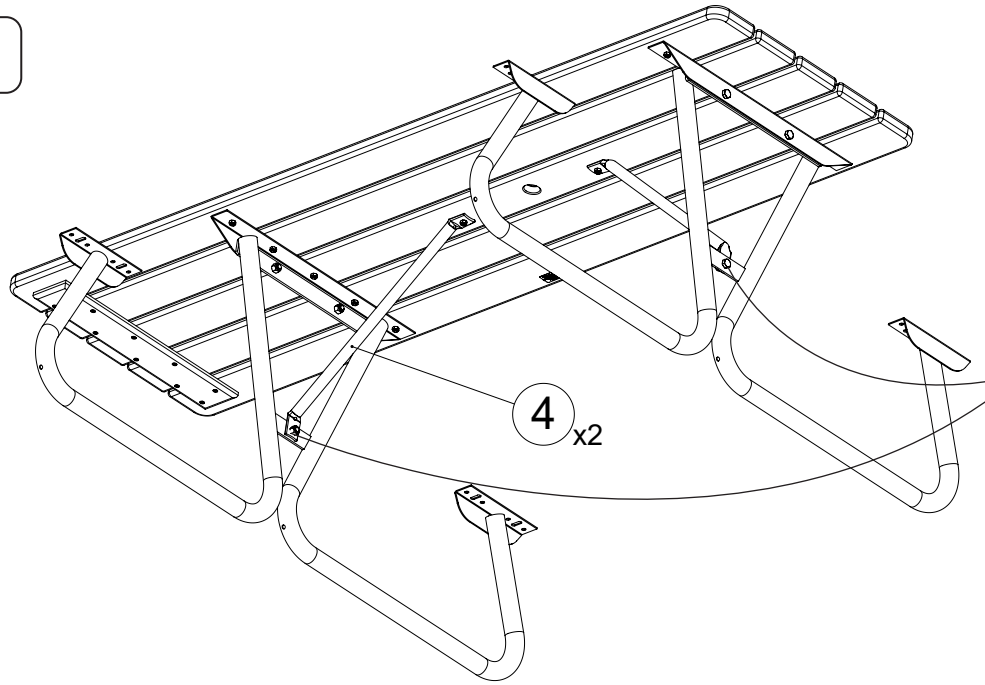


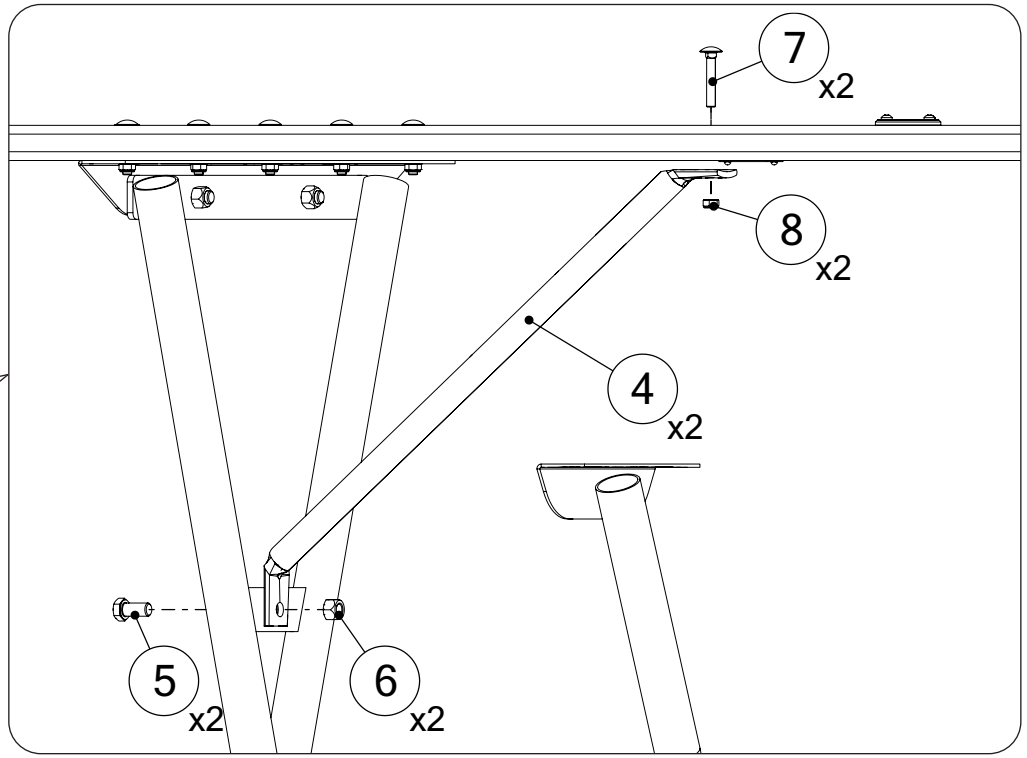



© Playpower inc
hags@hags.com
www.hags.com

**Picnic Table Ljung 2,2 m**
MASW134985

Rev: 0
22/01/26

3a

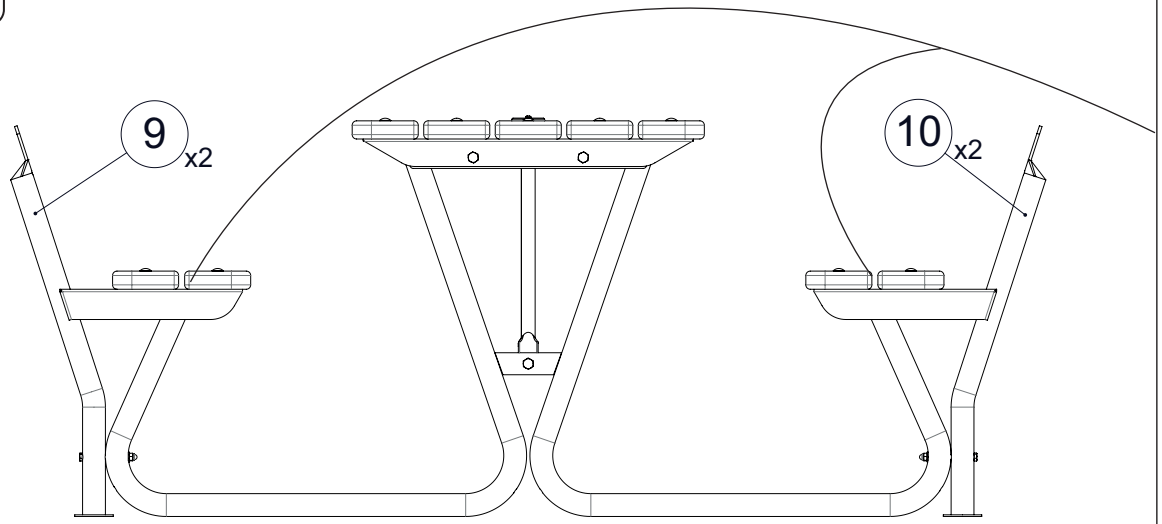


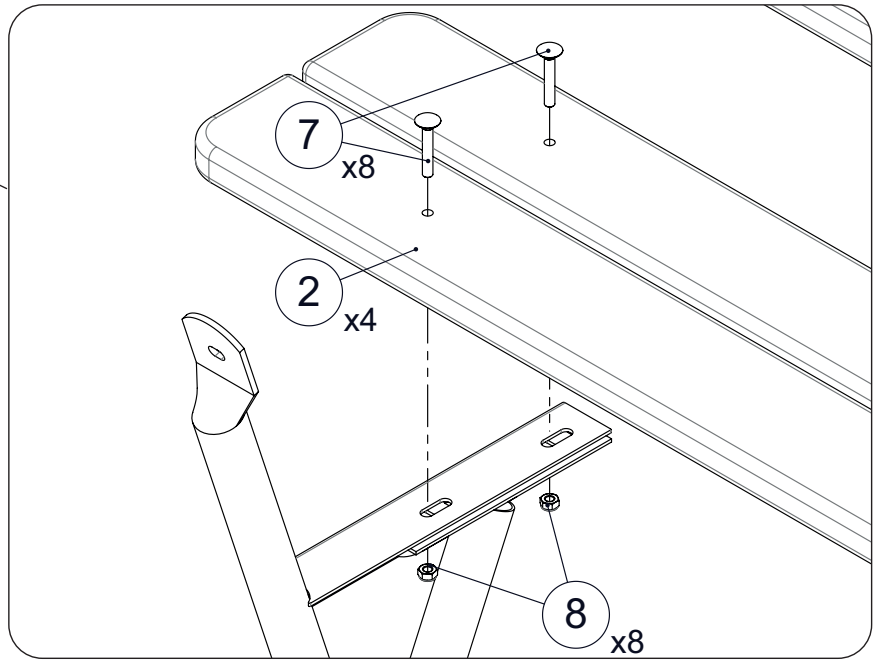


3b

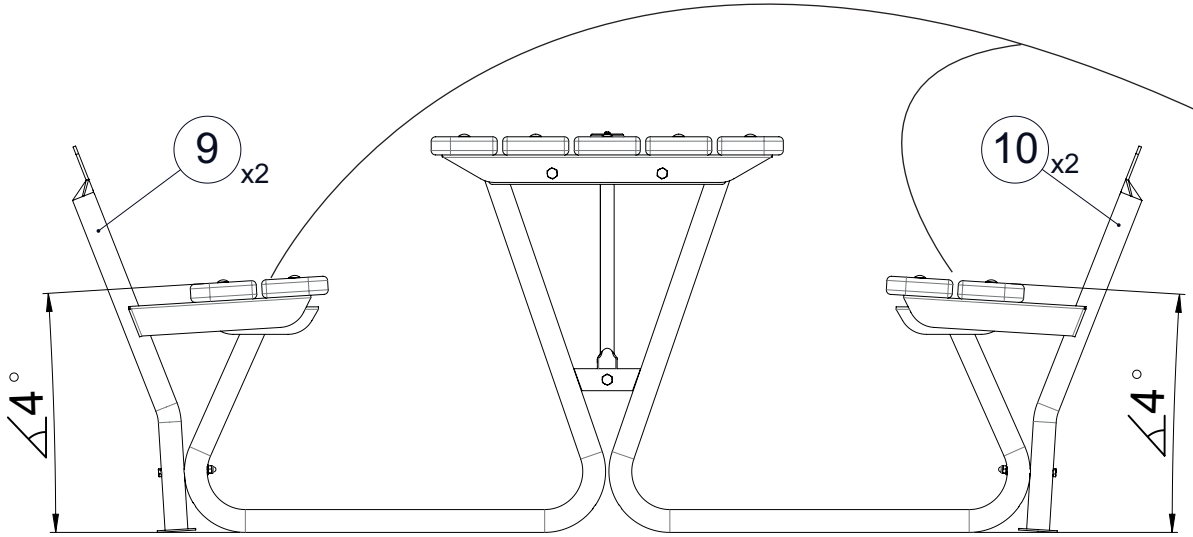


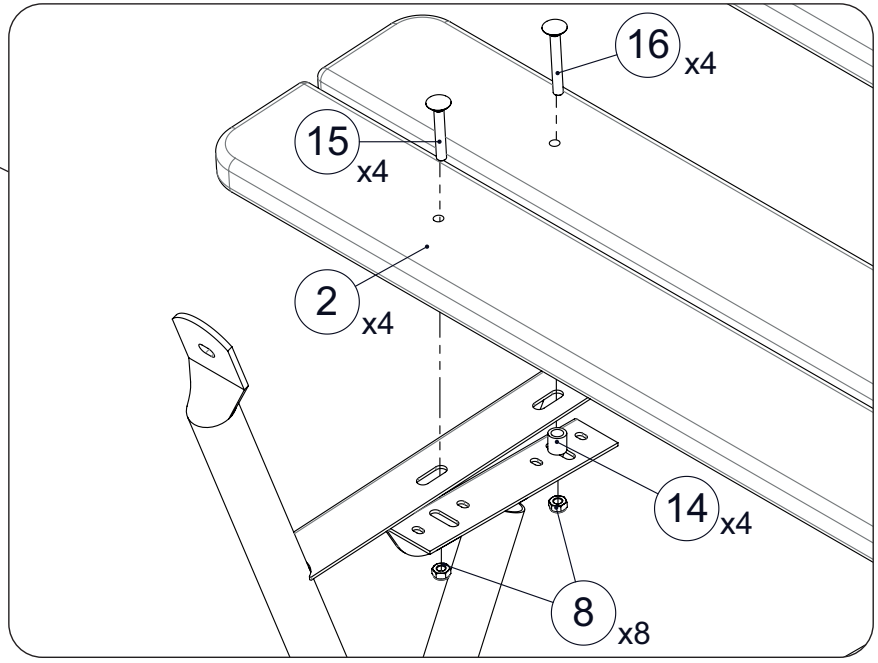



© Playpower inc
hags@hags.com
www.hags.com

**Picnic Table Ljung 2,2 m**
MASW134985

Rev: 0
22/01/26

4

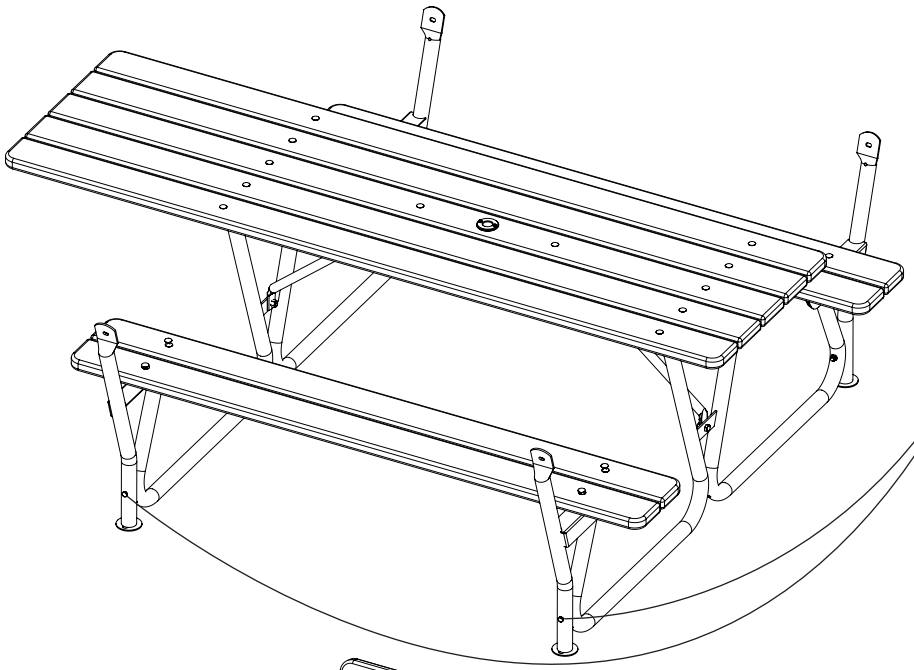

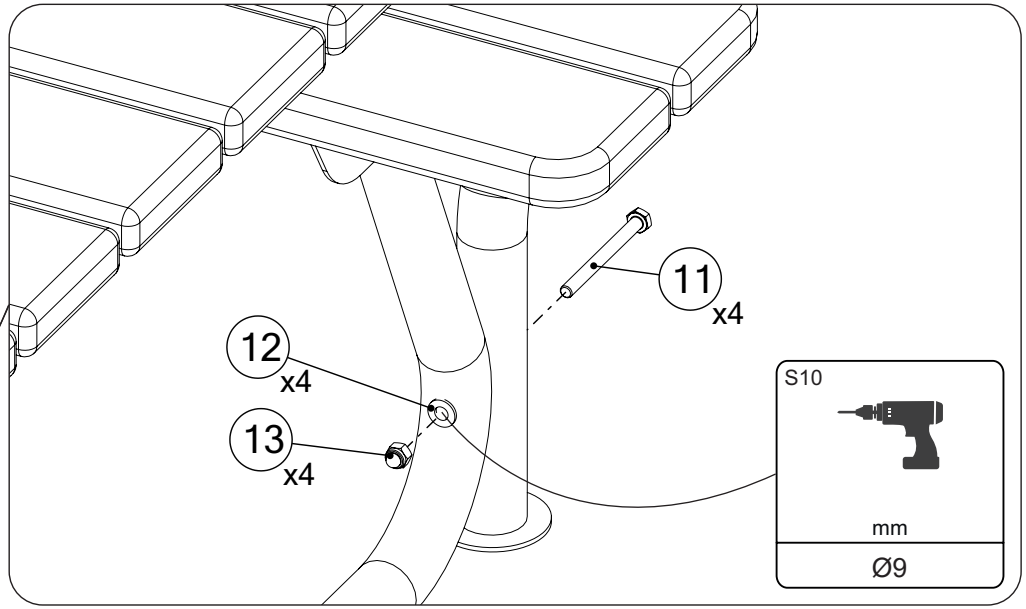


5

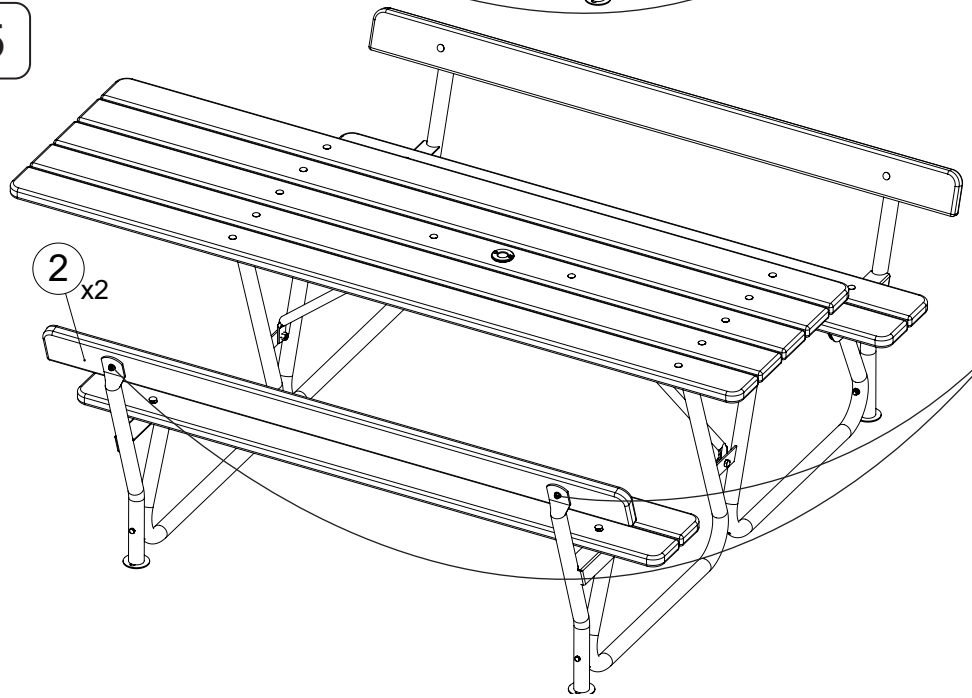


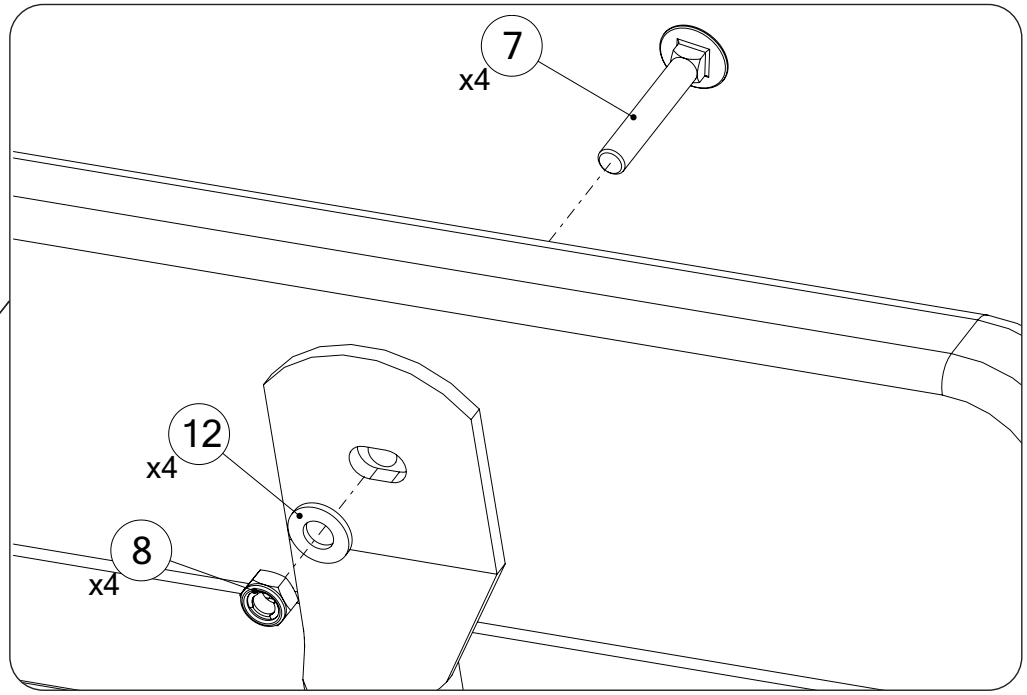



© Playpower inc
hags@hags.com
www.hags.com

**Picnic Table Ljung 2,2 m**
MASW134985

Rev: 0
22/01/26