HAGS®

Picnic Table Ljung

MASW134895

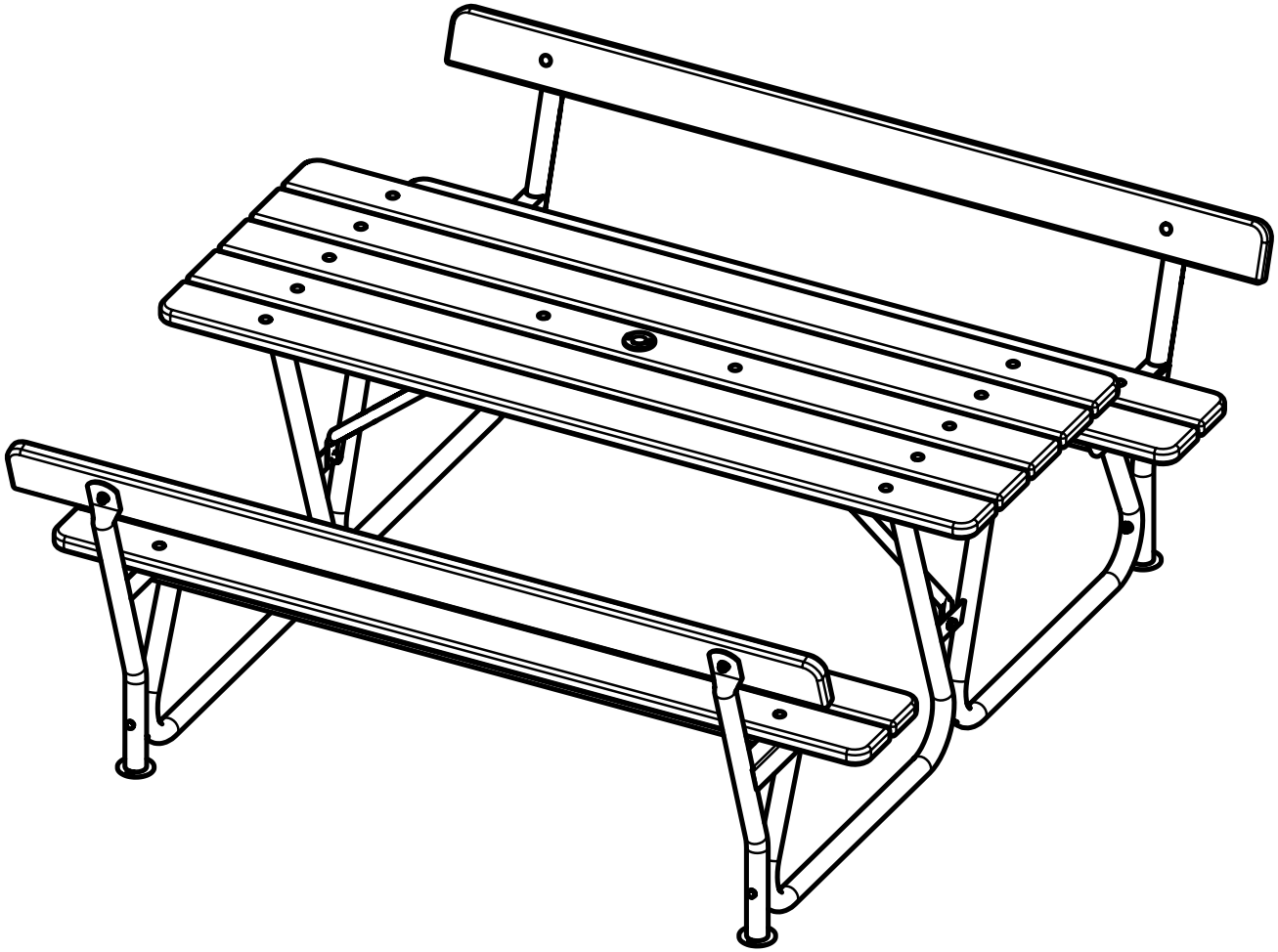

FS

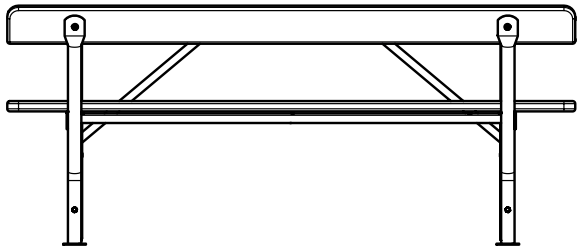

© Playpower inc
hags@hags.com
www.hags.com

1	32-02314		1 x	1760 x 638 x 82 mm	16.53 kg
2	43-03943		6 x	1760 x 118 x 32 mm	2.74 kg
3	31-00354		2 x	1547 x 50 x 673 mm	8.49 kg
4	33-06501		2 x	Ø25 x 660 mm	0.75 kg
5	8008409		6 x	ISO4017-M12x25-8.8	0.038 kg
6	8042811		6 x	ISO7042-M12-8	0.018 kg
7	8039282		14 x	ISO8677-M8x50-8.8	0.027 kg
8	8008795		14 x	M8-8-RingA2	0.006 kg

9	SW118941		2 x	710 x 421 x 70 mm	2.51 kg
10	SW118943		2 x	710 x 421 x 70 mm	2.51 kg
11	8008361		4 x	ISO4014-M8x90-8.8	0.042 kg
12	8008849	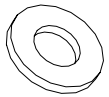	8 x	9x18x2-ISO4759-3-C	0.005 kg
13	8008753		4 x	DIN986-M8-8	0.010 kg
14	43-02628		4 x	Ø15x16	0.010 kg
15	8039283		4 x	ISO8677-M8x55-8.8	0.010 kg
16	8108316		4 x	ISO8677-M8x65-8.8	0.010 kg

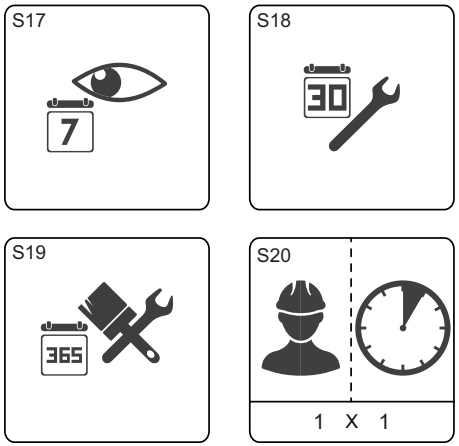

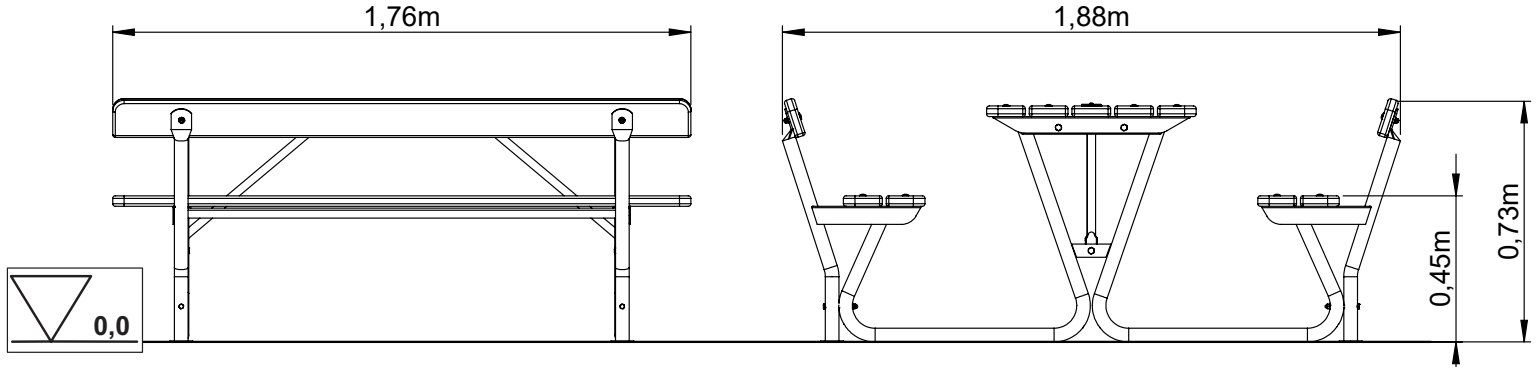

© Playpower inc
hags@hags.com
www.hags.com

1

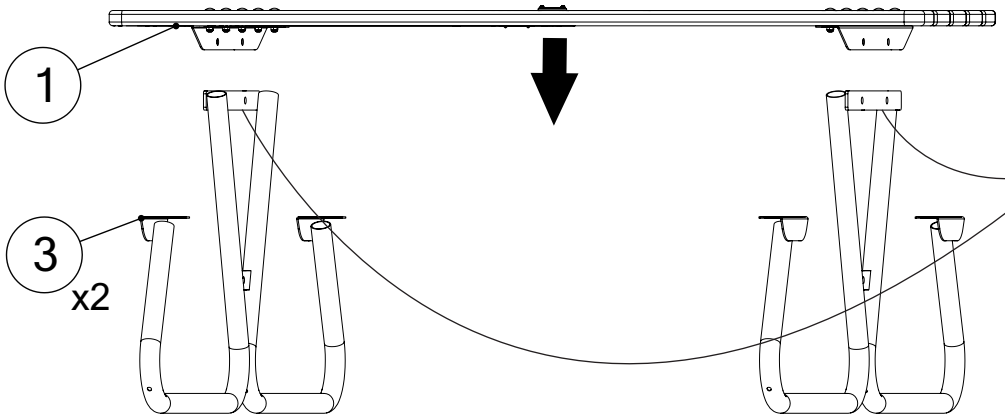

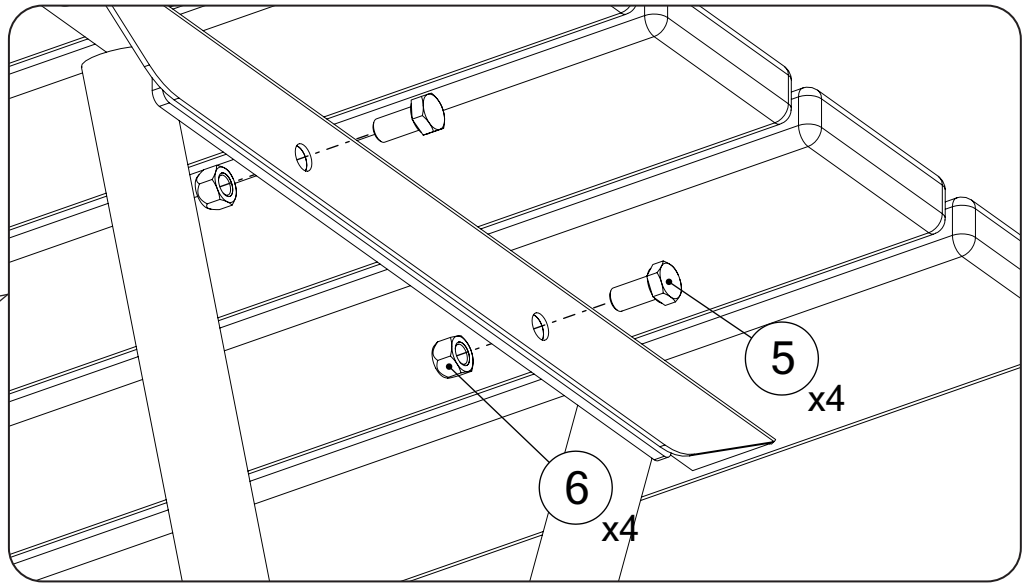

2

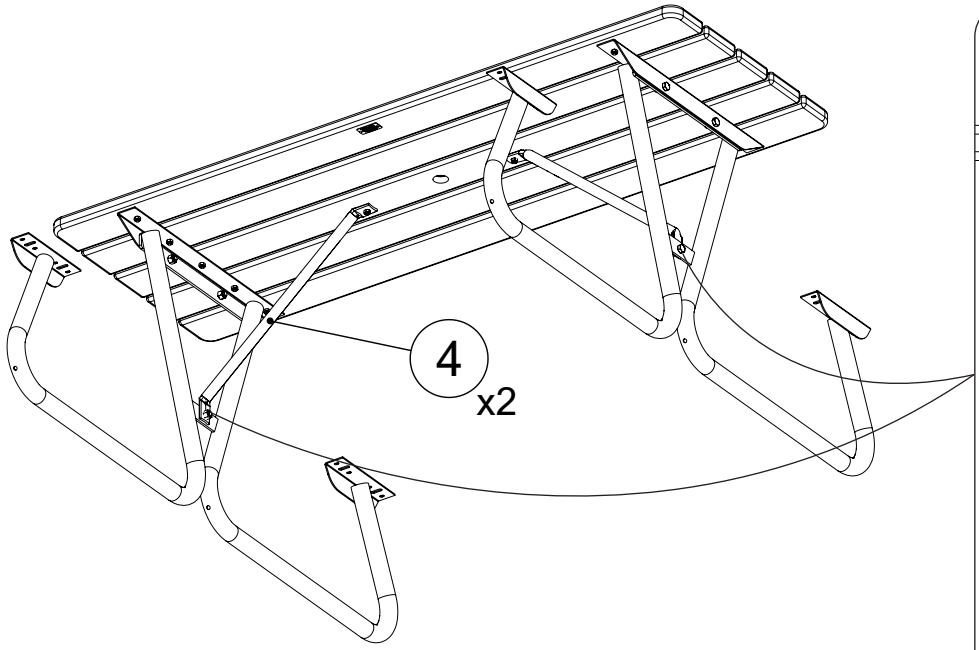

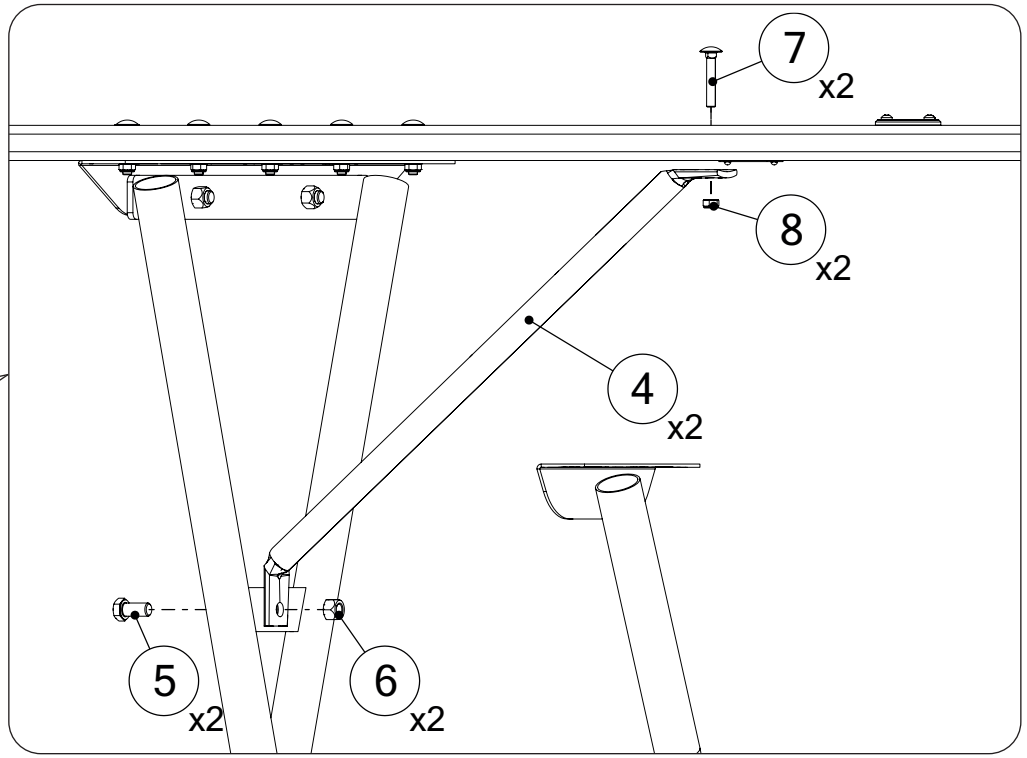

© Playpower inc
hags@hags.com
www.hags.com

3a

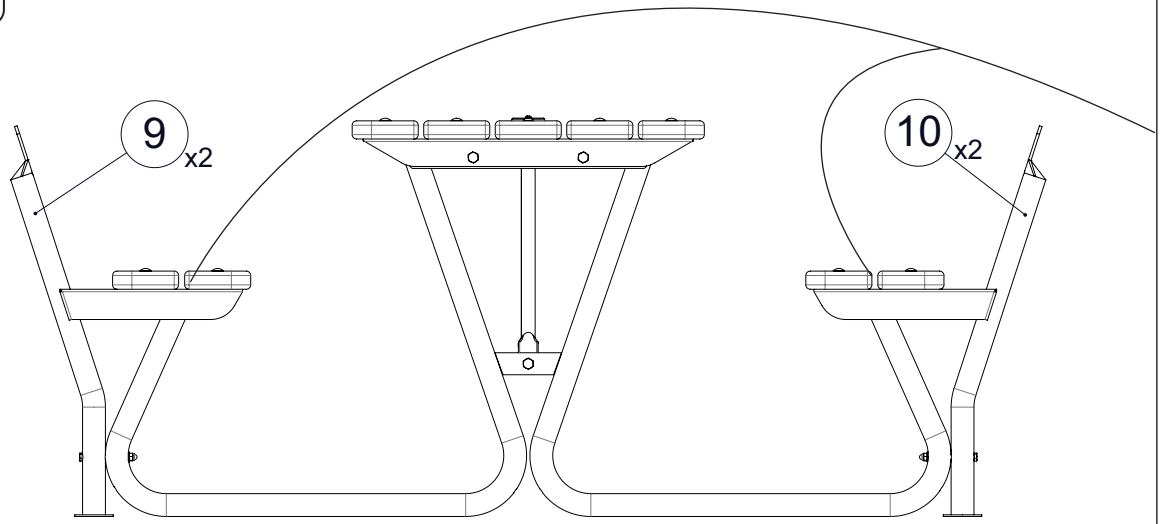

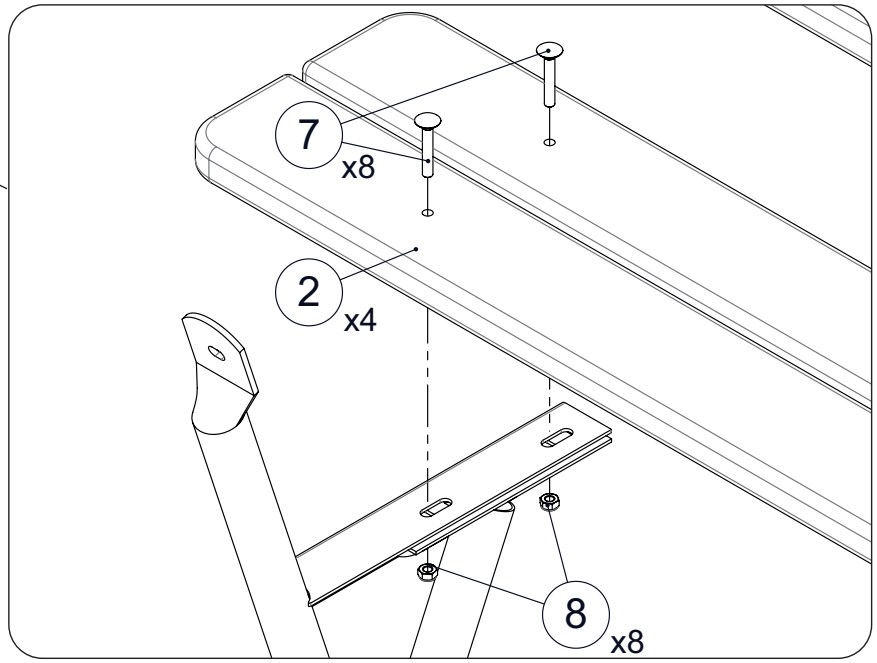

3b

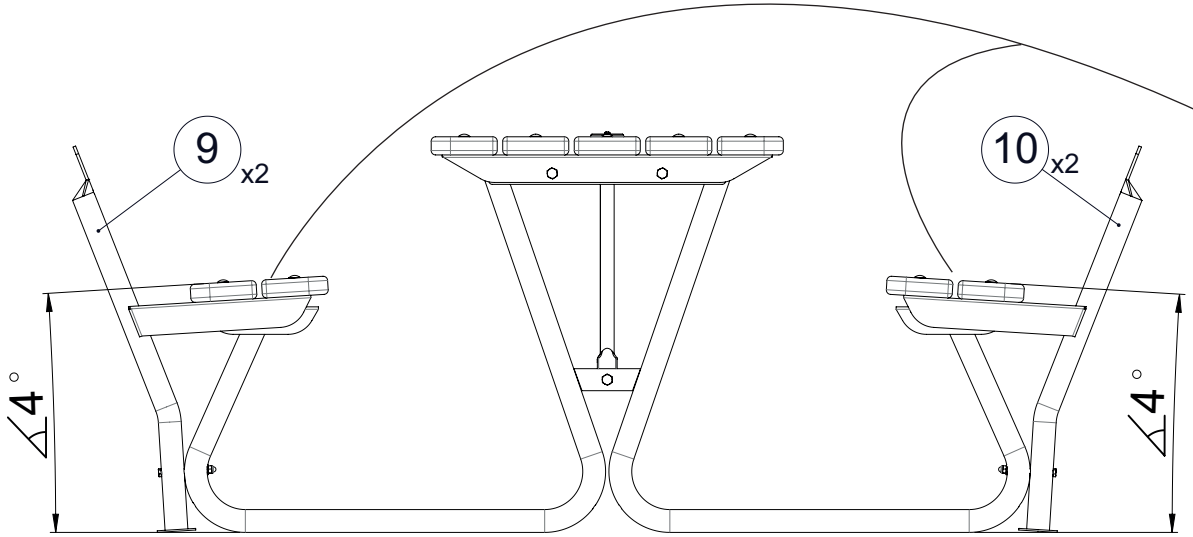

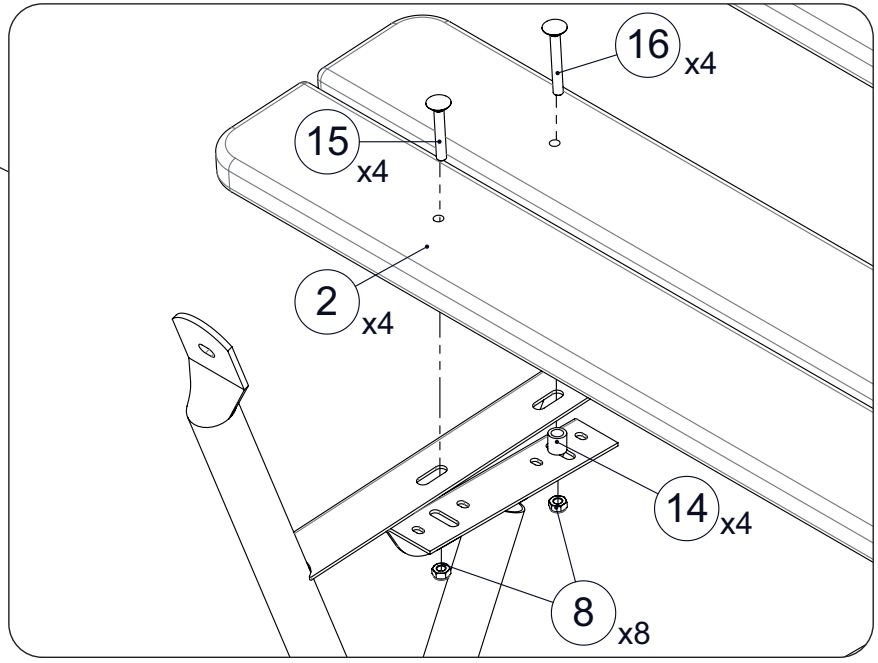

© Playpower inc
hags@hags.com
www.hags.com

Picnic Table Ljung
MASW134895

Rev: 0
20/01/26

4

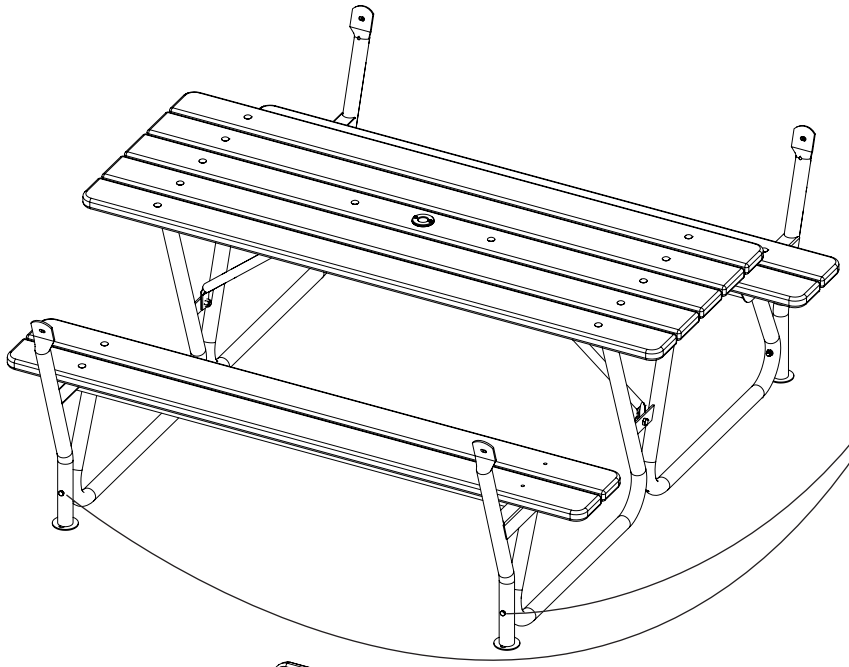

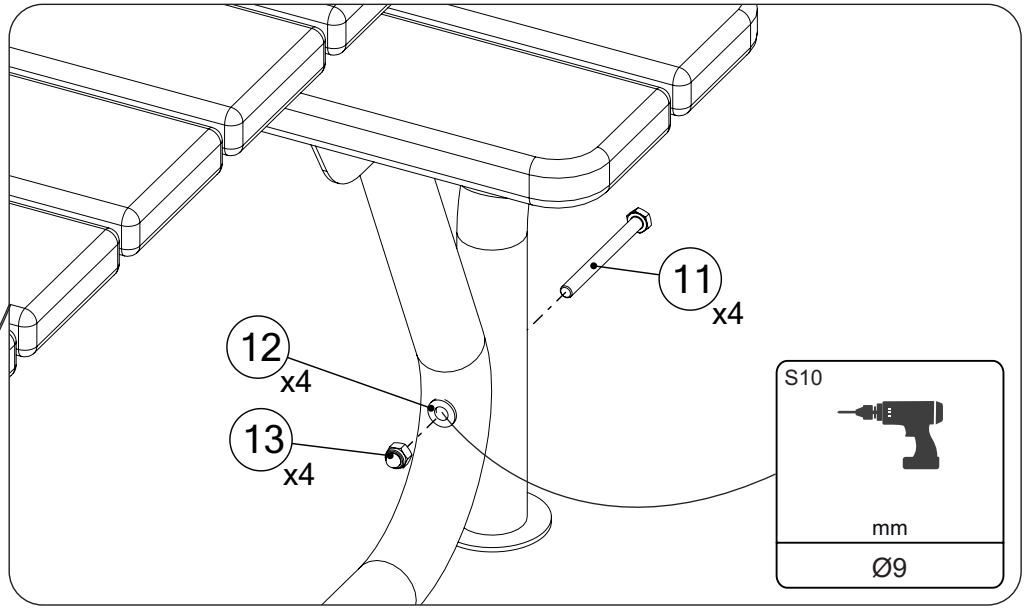

5

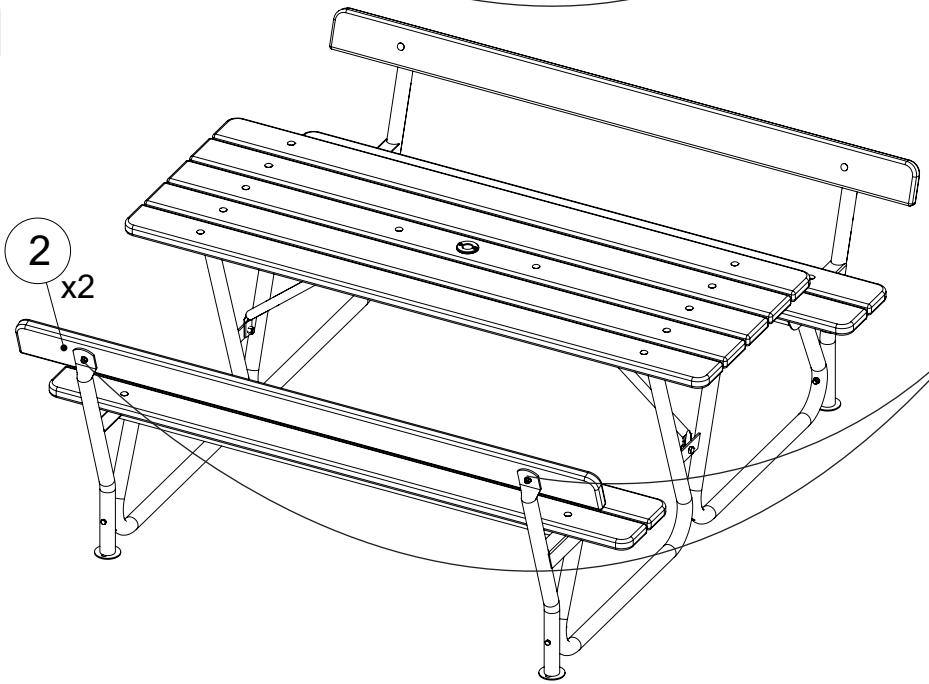

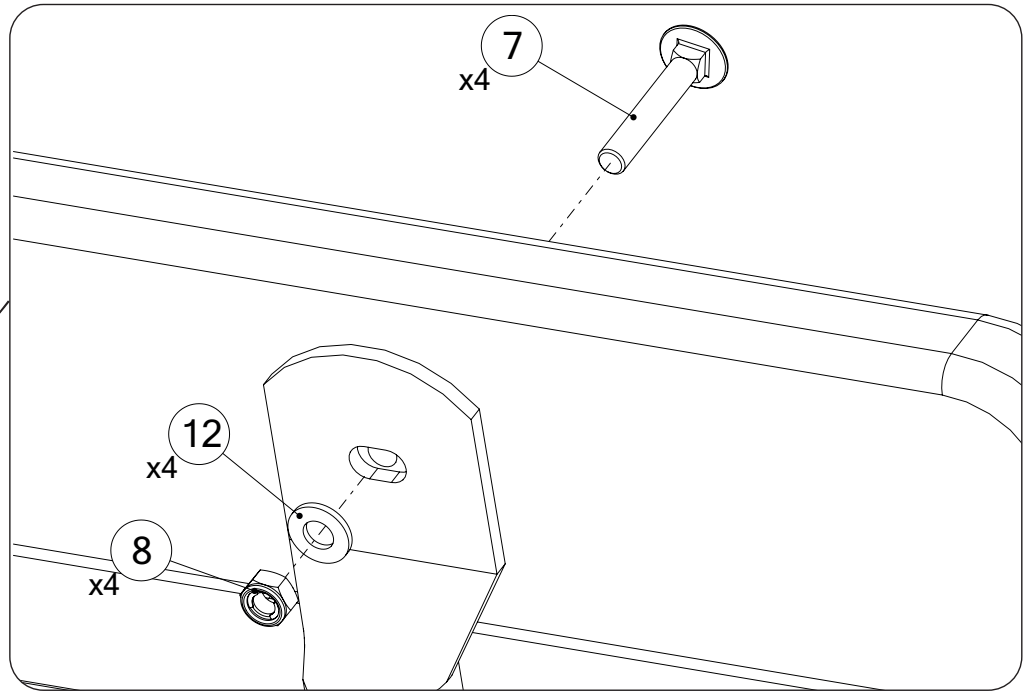

© Playpower inc
hags@hags.com
www.hags.com